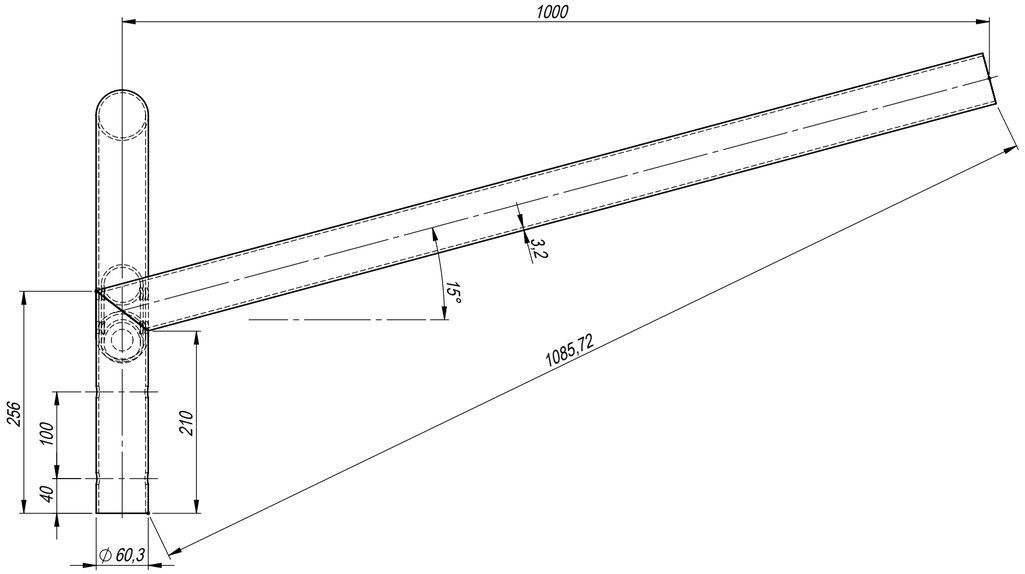

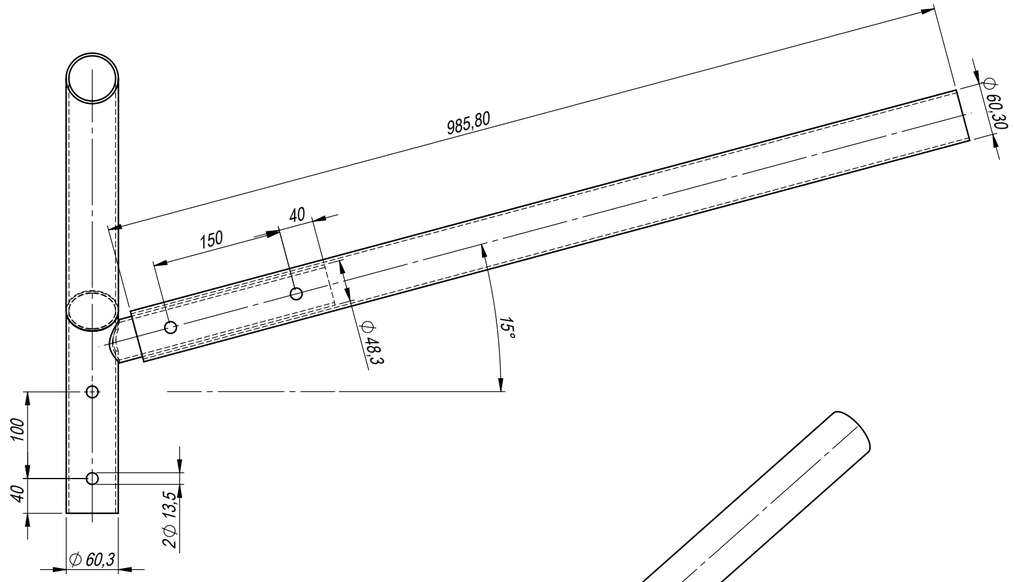

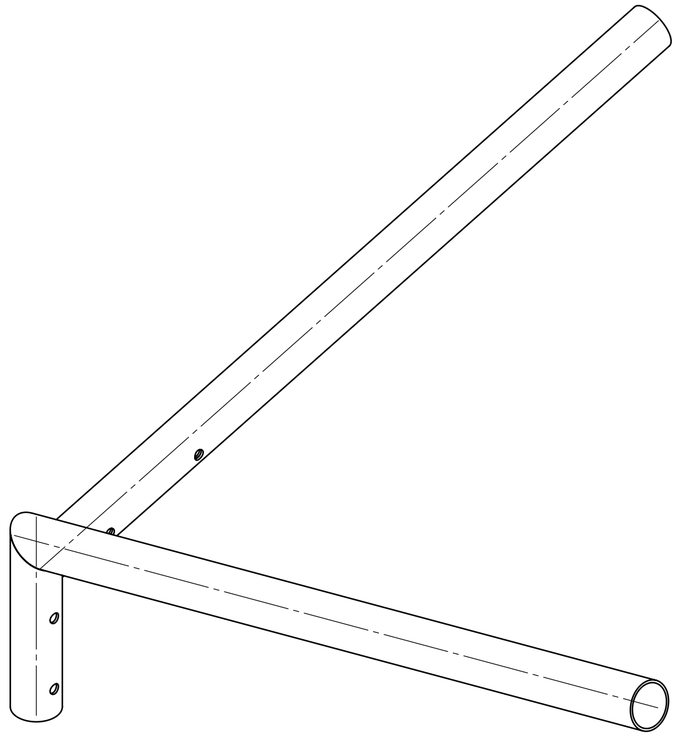

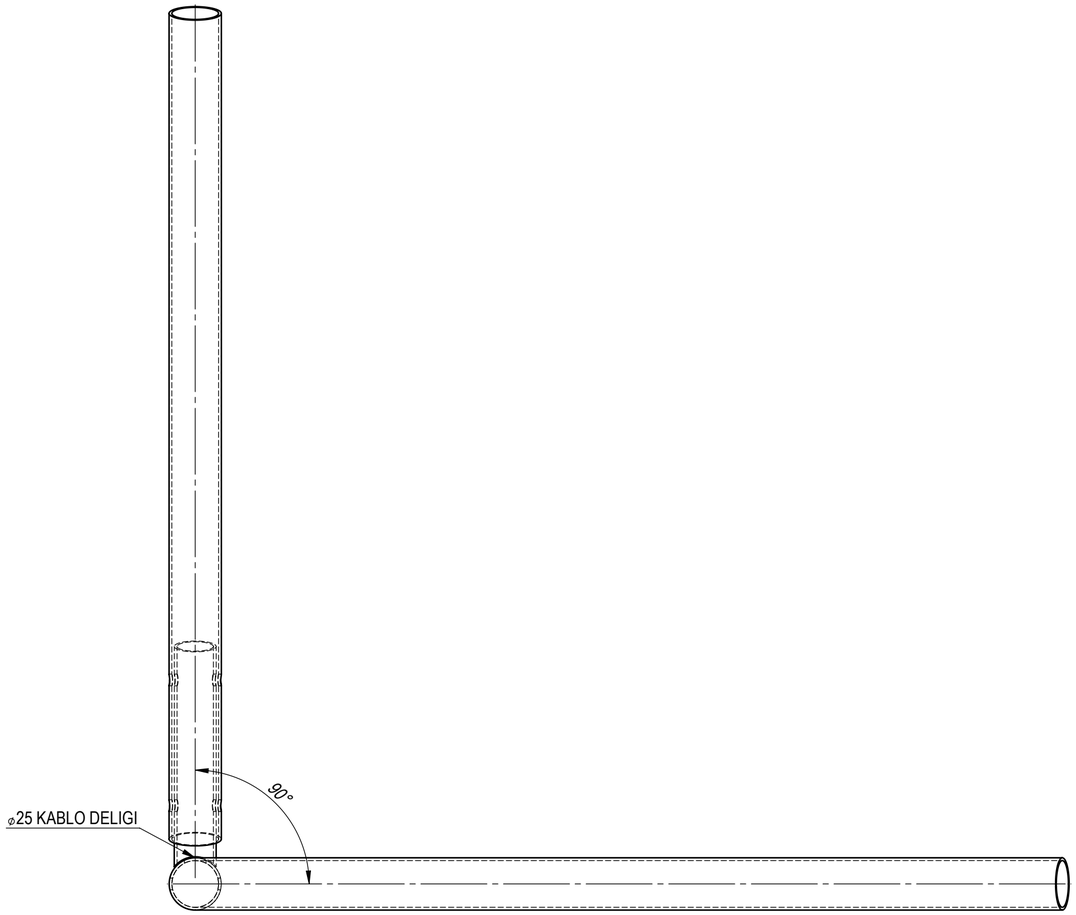

GENEL NOTLAR
GENERAL NOTES

TÜM ÖLÇÜLER mm'DİR.
ALL DIMENSIONS ARE IN mm.
TÜM ÇELİK ELEMANLAR,CIVATA, SOMUN VE RONDELALAR SICAK DALDIRMA GALVANİZDİR.(EN ISO 1461)
ALL STEEL ITEMS,BOLTS,NUTS & WASHERS TO BE HOT-DIP GALVD.AS PER (EN ISO 1461)
TASARIM KRİTERLERİNE GÖRE CIVATALAR (ISO 898) 5.8 & 6.8 & 8.8 OLARAK KULLANILABİLİR.
BOLTS CAN BE USED AS (ISO 898) 5.8 & 6.8 & 8.8 ACCORDING TO DESIGN CRITERIA.

	ADI - SOYADI NAME -SURNAME	TARİH DATE	İMZA SING	MALZEME MATERIAL		TASARIM NOTLARI DESIGN NOTES	
ÇİZEN DRAWN BY	KSAVAS	4.10.2019		GÖVDE SHAFT	S235	TASARIM RÜZGAR HIZI DESIGN WIND SPEED	
KONTROL CONTROL	I.YUCEL	4.10.2019		FLANŞ FLANGE	S235	GÜVENLİK KATSAYISI FACTOR OF SAFETY	
ONAY APPROVAL	K.CANBALOGLU	4.10.2019		DİĞER OTHER	S235	TASARIM STANDARDI DESIGN STANDART	

PWR2-1000-15D-90D
OUTLINE

SIP/TEK.NO ORDER NUMBER	STANDART			
PAFTA NO DRAWING NUMBER	PWR2-1000-15D-90D-00			
TARIH DATE	12.09.2018			
AĞIRLIK WEIGHT				REV A
BÖLÜM DEPARTMENT	POLIGON	SHEET 1 OF 1	ÖLÇEK SCALE 1:20	A2

MİTAŞ ENDÜSTRİ

ALL RIGHTS RESERVED. REPRODUCTION OR ISSUE TO THIRTD PARTIES IN ANY FORM WHATSOEVER IS NOT PERMITTED WITHOUT WRITTEN AUTHORITY FROM THE PROPRIETORS.

HER HAKKI MAHFUZDUR. YAZILI İZİN OLMADAN DÖKÜMANLARIN HİÇ BİR KISMI KOPYA, KAYIT, BASIM VEYA DİGER HERHANGİ BİR ŞEKİLDE ÇOGALTILAMAZ VE YAYINLANAMAZ.